Flow Meter

User Manual

IMQ52F-EZ02

Preface

Thank you for purchasing our products!

This manual is about meter functions, settings, connection methods, operation flow, and methods to identify the faults. Please read this manual carefully before operating and using it correctly.

After reading it, please keep it properly in the place where you may read it any time for your reference.

Note

Modification of this manual contents will not be notified as a result of some factors, such as function upgrading.

We try our best to guarantee that the manual content is accurate, if you find something wrong or incorrect, please contact us.

Any reprint and copy of the manual content are strictly prohibited either in whole or in part.

Version

IMQ52F-EZ02f the second edition Dec. 2025

CHAPTER 1 SAFETY INSTRUCTIONS ..... - 1 -
1.1 Manufacturer's Safety Instructions ..... - 1 -
1.2 Safety Instructions for Operators ..... - 3 -
CHAPTER 2 EQUIPMENT INTRODUCTION ..... - 4 -
2.1 Scope of Delivery ..... - 4 -
2.2 Principle of electromagnetic flowmeter measurement ..... - 5 -
2.3 Structure of electromagnetic flowmeter ..... - 6 -
2.4 Use environment description ..... - 7 -
2.5 Terminal description ..... - 8 -
2.6 Name Plate ..... - 9 -
CHAPTER 3 INSTALLATION ..... - 10 -
3.1 Installation Tips ..... - 10 -
3.2 Storage ..... - 10 -
3.3 Installation Requirements ..... - 10 -
3.4 Piping design ..... - 11 -
3.5 Sensor installation process ..... - 13 -
3.6 Machinery installation ..... - 16 -
3.7 Dimensions of the pipeline electromagnetic flowmeter ..... - 17 -
3.8 Dimensions of plug-in electromagnetic flowmeter ..... - 18 -
CHAPTER 4 ELECTRICAL CONNECTION ..... - 26 -
4.1 Safety Tips ..... - 26 -
4.2 Connect Signal and Magnetic Field Current Cable ..... - 27 -
4.3 Measurement Sensor Ground ..... - 29 -
4.4 Connected to Power ..... - 30 -
4.5 Output introduction ..... - 32 -
CHAPTER 5 STARTUP ..... - 34 -
5.1 Power on ..... - 34 -
5.2 Converter startup ..... - 34 -
CHAPTER 6 OPERATION ..... - 35 -
6.1 Flow display and operation Button ..... - 35 -
6.2 Flow parameter display interface ..... - 37 -
6.3 Perating instructions for mechanical keys ..... - 39 -
6.4 Operating instruction ..... - 40 -
6.5 Configuration details ..... - 44 -
6.6 Quick setup menu ..... - 54 -
CHAPTER 7 FUNCTIONS ..... - 55 -
7.1 System information ..... - 55 -
7.2 Pulse/Frequency/Current output ..... - 56 -
7.3 Serial communication ..... - 58 -
7.4 Hart Communication ..... - 60 -
7.5 Bluetooth Mini Program Description ..... - 67 -
7.6 Firmware upgrade instructions ..... - 72 -

7.7 Operation instructions of flow correction function . . . . . − 73 −
CHAPTER 8 TECHNICAL PARAMETERS . . . . . − 77 −
8.1 Technical parameters . . . . . − 77 −
8.2 Flow Meter . . . . . − 81 −

Chapter 1 Safety Instructions

1.1 Manufacturer’s Safety Instructions

Copyright and Data Protection

The content of this document has been checked carefully, but we do not guarantee that the contents are totally accurate, and it is in accordance with the latest version.

The contents and works of this document are under China's copyright protection. Materials from the third party have been marked. Any copy, processing and transmission of it out of the scope of copyright, in any forms, must get the written permission of the authors or the manufacturer.

Manufacturers always try to respect the copyrights of others and try to use their own works or works without authorization.

Personal data (such as name, address or E-mail address) used in manufacturer’s documents, if possible, are conducted on a voluntary basis. Use of products and services, if possible, starts without having to provide personnel data. We remind you: data transmission on the Internet (such as communicating via email) may possibly meet security vulnerabilities. We can't give security guarantee that data will definitely not be obtained by a third party. Here, we are clearly against the third-party using contact data, within the scope of copyright notice obligation, to send advertising materials without any requirement.

Exemption Clause

The manufacturer will not bear the responsibility for any forms of loss caused by using the product; these consequences include direct, indirect or accidental losses as well as these coming from punishment, but not limited to these consequences.

If the manufacturer has intentional behavior or gross negligence, the disclaimer is invalid. If it is not allowed to limit the product’s self-assurance, nor is it allowed to waive or limit certain types of compensation, and these rights are suited for you as well as according to applicable laws, in this case the above disclaimer or limitations may partially or completely not apply to you.

For every purchase of products, they are applicable to product documentation and manufacturer's sale terms.

As for document contents including this disclaimer, the manufacturer reserves and has the right to modify at any time in any way for any reason without any notice in advance, and it will not bear the responsibility for the consequences coming out of any forms of change.

Product Liability and Warranty

The operator judges whether the flow meter serves the purpose and bear the responsibility for it. The manufacturer does not assume the consequences caused by operator's misuse of meter. Wrong installation and operation of flow meter (system) will lead to deprive of warranty rights. In addition, the corresponding 'standard sales terms' applies as well, and the clause is the basis of purchase contract.

Document Details

In order to avoid harm or damage to the equipment when used improperly, please make sure reading the information in this document before using it. In addition, you must comply with national standards, safety regulations and accident prevention rules.

If you can't understand this document, please ask the manufacturer for help. The manufacturer will not take the responsibility for property loss or physical injuries due to misunderstanding of the information contained in the document.

This document will help you to establish favorable operating conditions so as to make sure that you use the equipment in a safe and effective way. In addition, something of particular attention and safety measures in the document are marked by the following marks.

Display Convention

The following symbols will make it easier for you to use this document.



Danger!

This symbol signifies related and important safety tips.



Warning!

Such warnings must be paid attention to. Slight negligence may lead to serious health threat, and may damage the equipment itself or the operating factory facilities.



Note!

Such warnings must be paid attention to. Any slight negligence may also lead to functional fault of the equipment itself.



Tips!

This symbol signifies related important information concerning operating instrument.

1.2 Safety Instructions for Operators



Warning!

Only corresponding personnel who got trained and authorized is allowed to install, use, operate and maintain the equipment. This document will help you to establish favorable operating conditions so as to make sure that you use the equipment in a safe and effective way.

Chapter 2 Equipment Introduction

2.1 Scope of Delivery



Tips!

Please check whether the boxes are damaged or not, and whether they have been handled roughly or not. Please report the damage to the deliverer and the manufacturer.



Note!

Please check the packing list to make sure that all the goods you received are integrated.



Note!

Please check the name plate of the equipment, and confirm whether the power supply is the same as your order. If incorrect, please contact manufacturer or supplier.

2.2 Principle of electromagnetic flowmeter measurement

Principle of electromagnetic flowmeter measurement

The working principle of electromagnetic flowmeter is based on Faraday's electromagnetic induction law.In the figure, the two electromagnetic coils at the top and bottom generate constant or alternating magnetic fields. When the conduction medium flows through the electromagnetic flux, the induction electromotive force can be detected between the left and right electrodes on the wall of the flowmeter. The magnitude of this induction electromotive force is proportional to the velocity of the conducting medium, the magnetic induction intensity of the magnetic field and the conductor width (the inner diameter of the flowmeter measuring tube).The equation of induced electromotive force is:

$$E=K\times B\times V\times D$$

Among them:

- E - induced electromotive force
- K - instrument factor
- B - Magnetic induction intensity
- V - average flow rate in the pipe section
- D - the inner diameter of the pipe

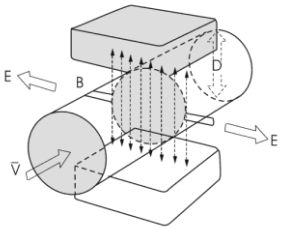

Measuring flow rate, fluid flows through the magnetic field perpendicular to the flow direction, fluid flow induction conductivity an induction electric potential is proportional to the average flow velocity, so the measured conductivity is higher than the minimum of the electric conductivity of liquid flow - 5 us/cm (electromagnetic flowmeter can measure conductivity greater than 5 us/cm theoretically conductive medium, but should guarantee the electromagnetic flowmeter in practical measurement used in the electrical conductivity measured medium in 30 us/cm or above (greater than the theoretical value for one to two orders of magnitude) environment, and must be based on online measurement of electrical conductivity value). The induced voltage signal through two electrodes detection, and through the cable sent to converter, after a series of analog and digital signal processing, cumulative flow and transient flow display screen in converter.

2.3 Structure of electromagnetic flowmeter

As can be seen from the figure, the electromagnetic flowmeter mainly consists of the following parts:

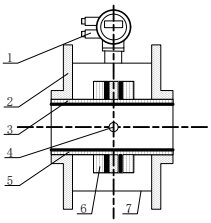

1-conveter
2-flange
3-insulation lining
4-electrode
5-measuring tube
6-excitation coil
7-shell

The electromagnetic flowmeter is mainly composed of two parts, the sensor and the converter. The sensors include flange, liner, motor, measuring tube, excitation coil and sensor housing. The converter comprises an internal circuit board and a converter shell.

1. converter: provide stable excitation current for the sensor, at the same time, the induction electromotive force obtained through the sensor is amplified and converted into standard electrical signal or frequency signal. Meanwhile, real-time flow rate and parameters are displayed for the display, control and adjustment of flow.
2. flange: connecting with process piping.
3. insulation lining: a complete layer of electrically insulated corrosion resistant material on the inside of the measuring tube and the flange sealing surface.
4. electrode: A pair of electrodes are installed on the wall of the measuring tube perpendicular to the magnetic force line to detect the flow signal. The electrode material can be selected according to the corrosion performance of the measured medium. There are also 1-2 grounding electrodes for grounding and anti-interference measurement of flow signal.
5. Measuring tube: the measuring tube flows through the measured medium. The measuring tube is welded with non-magnetic stainless steel and flanges lined with insulation lining.
6. excitation coil: the measuring tube is equipped with a set of coils on the outside and below to generate the working magnetic field.
7. shell: plays a role of protection instrument and sealing role.

2.4 Use environment description

Electromagnetic flowmeter applies only to measure the instantaneous flow rate of an electrically conductive liquid or liquid-solid two-phase flow, and has a flow accumulation function. Typically, the meter factory parameters will vary depending on the requirements of the order set in advance, the user does not need to set parameters before use, but requires the user to the nameplate on the pre-use check whether the parameters have been set up in advance, and with the actual working conditions do check.

Theoretically medium conductivity of not less than 5μS / cm can use ordinary type electromagnetic flowmeter cm, but the fact that ordinary electromagnetic flowmeter can measure the electrical conductivity higher than the theoretical value should be one to two orders of magnitude, at least more than 50μS / cm . Meanwhile conductivity measurement must be online measured conductivity prevail, there will be off-line measurement of air carbon dioxide, nitrogen dioxide dissolved into the media resulting in higher conductivity.

2.5 Terminal description

Integrative type

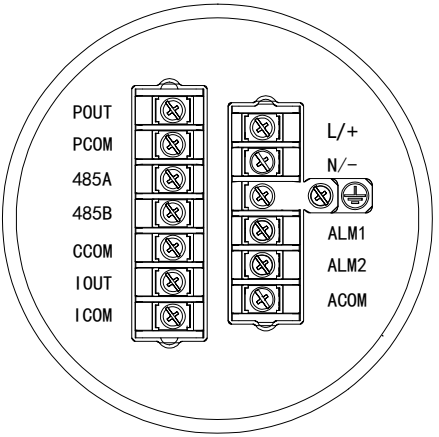

L/+, N/-:	220VAC power supply
ALM1，ALM2:	Alarm output
ACOM:	Alarm common end
POUT, PCOM :	Pulse/Frequency output
485A,485B :	485 serial communication
CCOM :	485 serial communication ground
IOUT, ICOM :	4-20mA output connection
⏚:	Converter instrument grounding protection

2.6 Name Plate

Note!

Please check the name plate of the equipment and confirm whether the power supply is the same as your order and is correct. If incorrect, please contact the manufacturer.

Electromagnetic Flow Meter

MODEL			
PRESSURE		VOLTAGE	
SIZE		PROTECTION	
FACTOR		FLUID TEMP.	
RANGE		AMB. TEMP.	
ELECTRODE			
LINING		PN	
ACCURACY		DATE	

Chapter 3 Installation

3.1 Installation Tips



Note!

Please check carefully whether the boxes are damaged .



Note!

Please check the packing list to make sure the goods that you receive is complete.



Note!

Please check the instrument nameplate, and confirm the delivery item is same with your order. Check the nameplate voltage is correct. If not correct, please contact the manufacturer.

3.2 Storage

- The instrument should be stored in a dry and clean place.
- Avoid exposure in direct sunlight for long.
- Instrument should be stored in the original package.

3.3 Installation Requirements



Note!

In order to ensure the installation reliably , the following measures must be taken.

- Enough space should be spared by its side
- Converter shouldn’t be suffered by violent vibration

3.4 Piping design

Note!

The following considerations are taken into account in piping design:

1. place:

   The electromagnetic flowmeter should be installed in a dry and ventilated place.

   Electromagnetic flowmeter should avoid sun exposure and rain, when installed in the open air, there should be protection against rain and sun protection facilities. The environment temperature is between - 20 ℃ ~ + 60 ℃.

   The electromagnetic flowmeter should avoid being installed in places with large temperature changes and exposed to high temperature radiation of the equipment. If necessary, it should be insulated and ventilated.

   The electromagnetic flowmeter should avoid being installed in the environment containing corrosive gas. When installation is necessary, ventilation and anti-corrosion measures should be taken.

   The installation site of the electromagnetic flowmeter should avoid strong vibration as far as possible. For example, the vibration of the pipe is large, and there should be a fixed pipe bracket on both sides of the electromagnetic flowmeter.

   The sensor part of the electromagnetic flowmeter with IP68(3 meters under water) protection level can be placed in water. The electromagnetic flowmeter with protection class IP65 shall not be immersed in water and installed in the open air.

2. Avoid magnetic field interference:

   The electromagnetic flowmeter should not be installed near motors, transformers or other power sources that may cause electromagnetic interference. Electromagnetic flowmeter should not be installed near the converter or get power from the converter distribution cabinet to avoid interference

3. straight pipe section:

   In order to ensure the measurement accuracy of the flow meter, it is recommended that the length of the upstream straight pipe segment of the sensor should be at least 5 times the pipe diameter (5D) and the length of the downstream straight pipe segment should be at least 3 times the pipe diameter (3D). (see figure 9and figure 10).

4. maintenance space:

   For the convenience of installation, maintenance and maintenance, sufficient installation space is required around the electromagnetic flowmeter.

5. A pipeline in which flow interruption is not allowed in the process:

   The by-pass pipe and cleaning port should be added in the installation of electromagnetic flow timing, as shown in figure 11. This device can guarantee the continuous operation of the equipment system when the meter is out of use.

6. Support of electromagnetic flowmeter:

   Do not install the electromagnetic flowmeter in isolation on the freely vibrating pipe, use an installation base to fix the measuring pipe. When the electromagnetic flowmeter needs to be installed in the ground, supports should be set in both the inlet and outlet pipelines, and metal protective plates should be installed on the top of the flowmeter.

Straight pipe length requirements

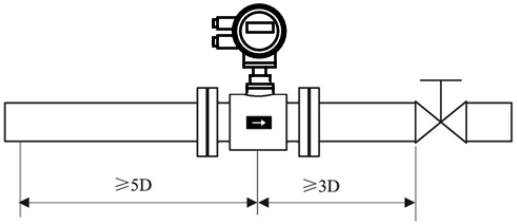

figure 9: Installation whose valve is the downstream of sensor.

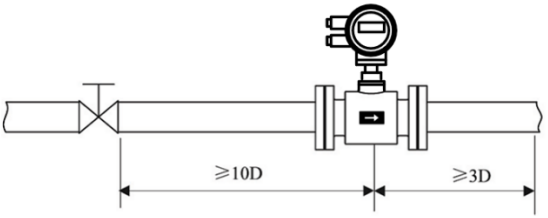

figure 10: Installation whose valve is the upstream of sensor.

The connection which is easy to clean pipe:

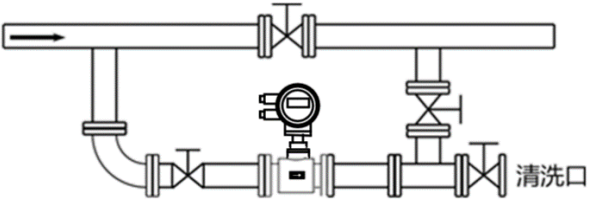

figure 11: Situation where the pipe needs to be cleaned and the fluid conduit cannot stop, you must install a bypass pipe to be able to continue running during cleaning system

3.5 Sensor installation process

This flowmeter can be set to automatically detect the positive and negative flow direction. The flow arrow on the sensor housing is the positive flow direction specified by the manufacturer. Generally, when installing the instrument, the user should keep the flow arrow in line with the field process flow.

Preferred position for electromagnetic flowmeter installation

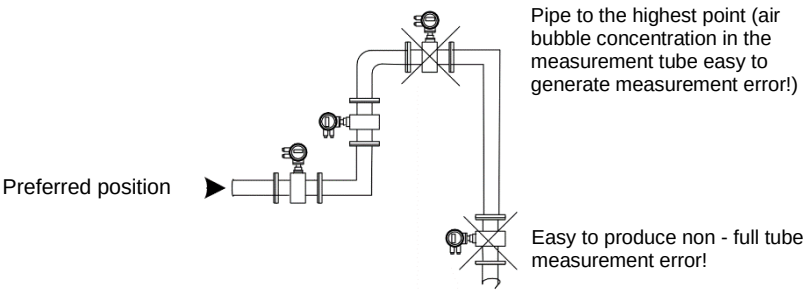

Installation direction of electromagnetic flowmeter and installation direction of sensor electrode

Sensors can be installed horizontally and vertically. Sensors in a horizontal when installation should make electrodes in a horizontal position, in this way, once the medium containing bubbles or precipitation, bubble not adsorption in the vicinity of the electrode, converter signal side open, also won't cover the precipitation electrode, the phenomenon such as zero drift.

Recommended mounting position

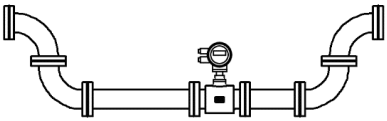

For liquid containing solid particles or the slurry suggestion vertical installation of electromagnetic flowmeter, a can prevent the phase separation of measured medium, the second lining wear can make the sensor is evener, three impurities were not able to measure the sediment at the bottom of the tube.

The flow direction must be ensured from the bottom up to ensure that the sensor measurement tube is always filled with media.

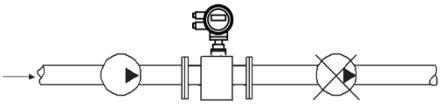

Figure: Electromagnetic flowmeters cannot be installed on the suction side of the pump to prevent the negative pressure produced by vacuum.

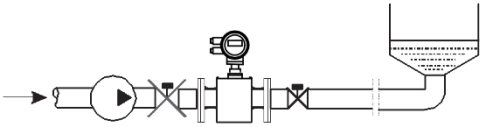

Installation that downstream of the sensor has the back pressure.

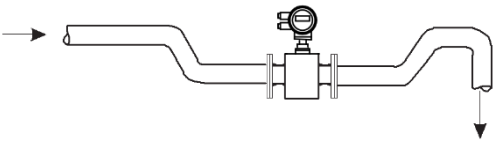

The electromagnetic flowmeter shall be installed in the bottom section (lower part of the pipe) of the open-drain pipe.

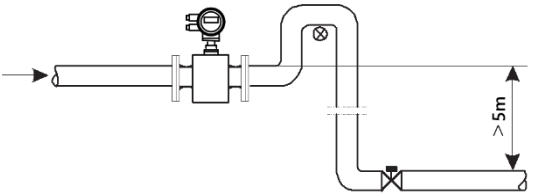

It valves shall be installed downstream of the electromagnetic flowmeter where the pipe drop exceeds 5 meters

no bubbles in the pipe

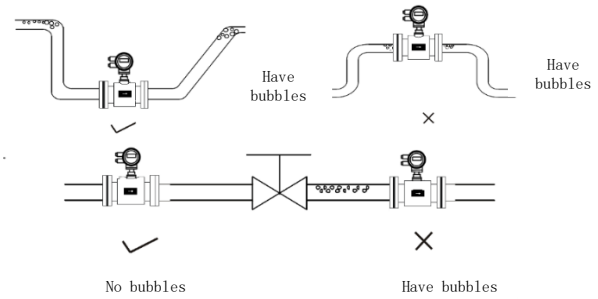

The piping design shall ensure that no gas is separated from the liquid

The flowmeter should be installed upstream of the valve because the pressure in the pipe will be reduced due to the action of the valve, resulting in bubbles

At the same time, instruments should be installed in the lower section to reduce the influence of entrained air bubbles on the measurement

3.6 Machinery installation

Note!

We don't supply installation materials and tools. Please use installation materials and tools that meet the occupational health standards and conform to safety regulations.

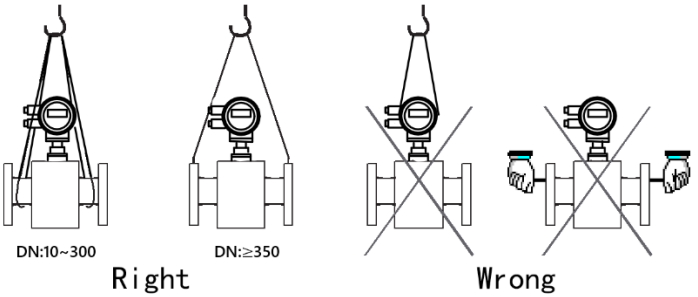

Installation of flowmeter pipe

1.Before installing the flowmeter, the pipeline should be calibrated to ensure that the meter's diameter has a good coaxial degree with the user's pipeline. For sensors with nominal through-diameter under 50mm, the axis of the sensor shall not exceed 1.5mm on the high side, the nominal through-diameter between 65-300mm shall not exceed 2mm, and the nominal through-diameter between 350mm and above shall not exceed 4mm.

2.The newly installed pipe usually has foreign matter (such as welding slag). Before installing the flowmeter, the sundries should be washed away, which can not only prevent the lining from being damaged, but also prevent the measurement error caused by the foreign matter passing through the measuring tube during the measurement period.

3.7 Dimensions of the pipeline electromagnetic flowmeter

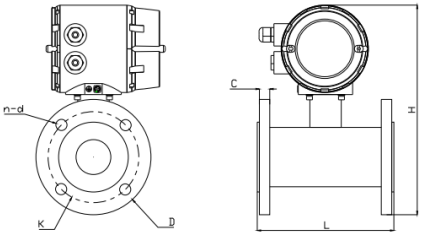

Nominal Diameter (mm)	Nominal pressure (MPa)	Connection dimension (mm)						
		L	H	D	K	d	n	C
15	4.0	200	315	95	65	14	4	14
20		200	315	105	75	14	4	16
25		200	315	115	85	14	4	16
32		200	315	140	100	18	4	18
40		200	315	150	110	18	4	18
50		200	320	165	125	18	4	20
65	1.6	200	350	185	145	18	8	22
80		200	365	200	160	18	8	24
100		250	380	220	180	18	8	22
125		250	410	250	210	18	8	22
150		300	440	285	240	22	8	24
200	1.0	350	495	340	295	22	8	24
250		450	560	395	350	22	12	26
300		500	600	445	400	22	12	26
350		550	670	505	460	22	16	30
400		600	720	565	515	26	16	32
450		600	765	615	565	26	20	36
500		600	820	670	620	26	20	38
600		600	930	780	725	30	20	42
700	0.6	700	1010	860	810	26	24	40
800		800	1110	975	920	30	24	44
900		900	1210	1075	1020	30	24	48
1000		1000	1310	1175	1120	30	28	52

3.8 Dimensions of plug-in electromagnetic flowmeter

1. Plug-in flange connection

The fixation method of the sensor adopts flange connection type. Firstly, calculate the length of the connecting pipe of the base according to the pipe diameter, and then weld the base to the pipe opening through the pipe opening. During the welding, pay absolute attention to the correct orientation and insertion depth of the flange hole of the base, so as to ensure that the direction of the sensor probe is perpendicular to the direction of the fluid. The base connection pipe shall not exceed the inner wall of the pipeline under test to ensure the inner wall of the outer pipeline is smooth. See the figure for the specific size and material specifications and models。

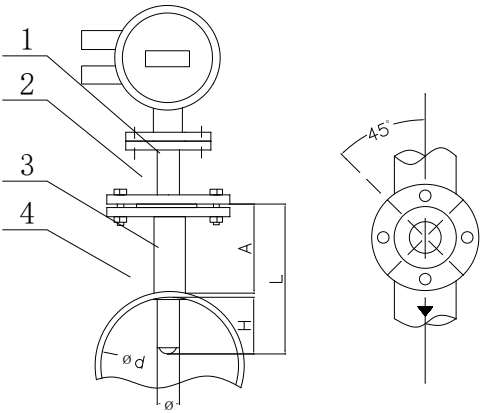

(1) DN200mm, DN300mm, DN400mm (without pressure installation)

The serial number	Name/Caliber	DN200mm	DN300mm	DN400mm
1	Sensor (L×Φ)	182×Φ38		
2	Flange	DN (40) 1.6MPa		
3	PUP JOINT	Φ45		
4	Conduit	Φd×S		

Installation principle: Ensure the depth of electrode inserted into the water pipe H=(D-2S)10%, namely A=182-(H+S)

Note: Under the condition that the production unit is not allowed to break the flow, pressure installation can be selected. First of all, directly weld the base to the installation position of the measuring pipe, then install the ball valve at the upper root, and then use the special pipe hole opening machine provided by our company to carry out the pressure opening. After the hole is opened, close the ball valve so that the fluid will not spill, and then connect the sealing parts provided by the manufacturer, and then install the sensor. (The installation with pressure will not affect the normal production), the specific size and material specifications and models are shown in the figure。

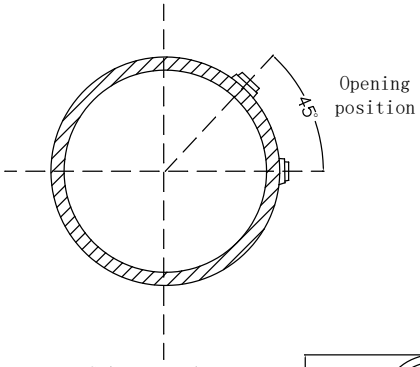

Schematic diagram of opening

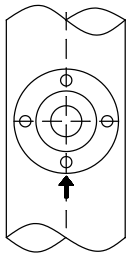

Installation direction diagram

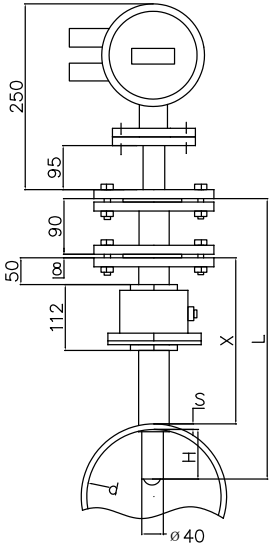

Installation diagram

（2）DN100-700 (Installation with pressure)

Name \ Caliber	DN100-700
Sensor（L×Φ)	400×Φ38
Seals (provided by the manufacturer)	Φ45×3
Transition flange	DN40 1.6Mpa
Ball valve	DN50
Connecting pipe	Φ50
The pipe	Φd×S

(3)DN800mm ~ DN1200 (with pressure installation)

Name \ Caliber	DN800-1200
Sensor（L×Φ)	450×Φ38
Seals (provided by the manufacturer)	Φ45×3
Transition flange	DN40 1.6Mpa
Ball valve	DN50
Connecting pipe	Φ50
The pipe	Φd×S

(3)DN1400 (with pressure installation)

Name \ Caliber	DN1400-3000
Sensor（L×Φ)	600×Φ38
Seals (provided by the manufacturer)	Φ45×3
Transition flange	DN40 1.6Mpa
Ball valve	DN50
Connecting pipe	Φ50
The pipe	Φd×S

Note: the above are all steel pipe installation and selection, such as in cast iron, cement pipe installation, you need to customize accessories

2. Plug-in valve fastening type

Figures (1) and (2) show the two structures of sensors with and without ball valves.

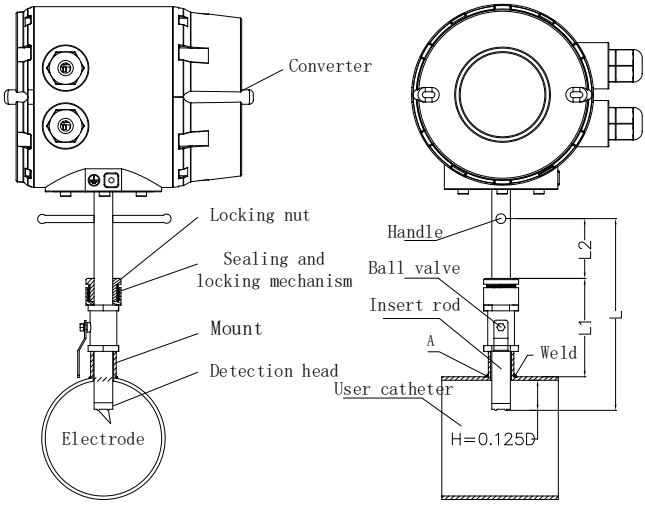

Figure 1

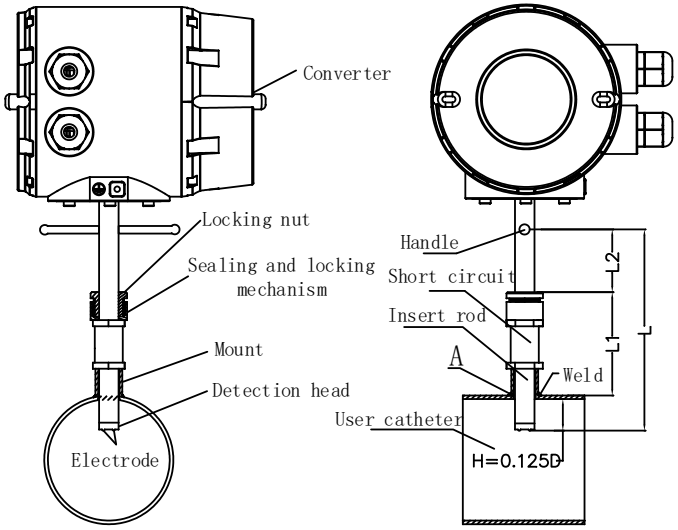

Figure 2

Please follow the following procedure steps for installation.

According to Figures (1) and (2), lift the detection rod outward until the electrode is flush with A, and then measure and record the size L2.

Installation - Insertion

(1) The user pipeline should be set horizontally, requiring a straight pipe section of at least 5DN in front of the sensor and at least 3DN behind it. The flow regulating valve should be located 3 DN downstream of the sensor.

The user pipeline should have no obvious vibration, and the inner wall of the pipeline should have no obvious unevenness.

(2) First, make a measurement directly above the pipeline measurement point Φ 60-62mm holes require smooth and clean edges around the circular hole, without burrs, gas cutting scars, etc.

(3) Unscrew the mounting parts from the sensor and reliably weld them to the above openings, with the following requirements:

A. As shown in Figure (1), make the lower end of the installation part flush with the inner surface of the pipeline;

B. Ensure no leakage.

(4) Loosen the three locking screws of the sensor and pull out the entire detection rod and detection head for later installation. (Note: Users are not allowed to open the connection between the detection head and the insertion rod!)

(5) Wrap hemp wire lead oil or PTFE tape around the upper thread of the installation part, and then tighten the ball valve together with the sealing and locking mechanism onto it.

(6) Slowly insert the detection rod from above and tighten the locking nut slightly. Press down the insertion rod to measure the same size as the original recorded L2. The installation is complete.

Installation - Removal

(1) First loosen the three set screws on the side of the lock nut, and then remove the lock nut 1-2 turns to loosen the sealing ring for easy removal and insertion of the rod.

(2) Lift the handle up and lift the insertion rod out about 250mm, then close the ball valve to remove the insertion rod.

As shown in Figures (1) and (2), L=L1+L2+H, where L and L1 are fixed measurable values, L2=L-L1-H, and the relationship between insertion depth H and pipe diameter D is shown in the table below.

Name/Caliber	Insertion depth H
DN100	Bottom (not in contact with pipe wall)
DN125-450	0.5D
DN500-DN700	0.25D
DN800-DN3000	0.125D

Schematic diagram of on-site installation steps for plug-in electromagnetic flowmeter with pressure and water

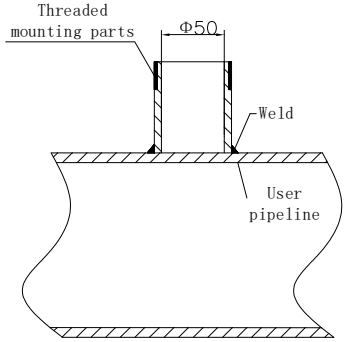

Step 1: Weld the installation base to the user's process pipeline. Requirement: When welding the installation base, it must be perpendicular to the process pipeline and centered, and the welding must be reliable, as shown in the above figure.

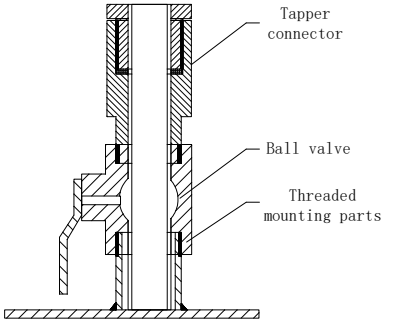

Step 2: Install the ball valve (with the long cavity of the ball valve facing upwards) and the connecting parts of the hole opener onto the installation base with fasteners, as shown in the above figure.

Step 3: Open the ball valve, insert the drill bit of the hole opener into the connecting piece until it is above the user's process pipeline, tighten the compression nut on the hole opener, open the small drainage valve on the hole opener, and start drilling (note that when the process pipeline is drilled through, there is already pressure in the pipeline, and the small hole opener is pushed out. It is best to open the hole under low pressure), as shown in the figure on the right.

Step 4: After drilling the hole, slowly lift the drill bit of the hole opener into the cavity of the upper hole opener connector of the ball valve, close the ball valve, and remove the hole opener and its connector from the ball valve.

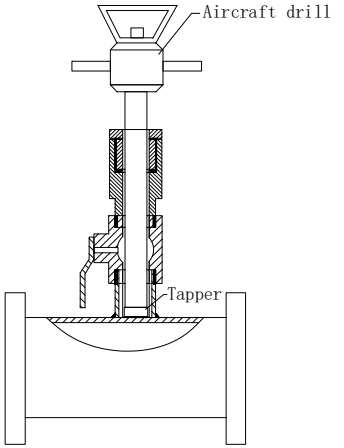

Step 5: Install the plug-in flow meter and sealing component onto the ball valve, and tighten the compression nut on the sealing component. Open the ball valve (note that there is already pressure in the pipeline, be careful to push out the plug-in flow meter), insert the plug-in flow meter into the specified position inside the pipeline, align the flow direction indicator rod with the water flow direction, tighten the compression nut and positioning screw, and complete the installation, as shown in the right figure. Note: If there is no need to install with pressure and water on site, gas cutting can also be used to directly open a new one on the user's process pipeline Φ Weld the installation base with a small hole of 60.	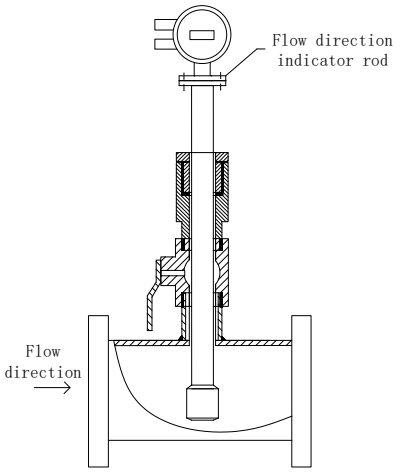

Chapter 4 Electrical Connection

4.1 Safety Tips



Danger!

Only when power is switched off, can we do all the work about electrical connections. Please pay all attention to the power supply on the name plate!



Danger!

Please observe national installation regulations



Danger!

Please strictly observe local occupational health and safety regulations. Only those who have got properly trained are allowed to operate on the electrical equipment.



Tips!

Please check the name plate of the equipment, and confirm whether the supply is the same as your order.Check whether voltage and E-supply on the nameplate is correct. If incorrect, please contact manufacturers.

4.2 Connect Signal and Magnetic Field Current Cable



Danger!

Only when power is cut off can you connect signal and magnetic field current conductor.



Danger!

The equipment must be grounded in accordance with regulations so as to protect the operator from electrical shock.



Danger!

In case that equipment be used in explosion danger areas, special notes are given to explosion-proof instructions for safety tips.



Warning!

Please strictly observe local occupational health and safety regulations. Only those who have got properly trained are allowed to operate on the electrical equipment.

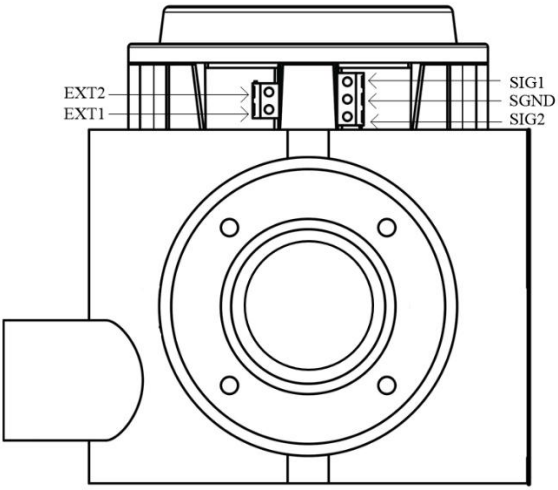

Connection illustration

- Excitation line:

  EXT1-- Sensor excitation coil positive terminal

  EXT2--Sensor excitation coil negative terminal

- Signal line

  SIG1--- The positive electrode sensor signal

  SIG2--- The negatve electrode sensor signal

  SGND-- Signal earth

4.3 Measurement Sensor Ground



Danger!

There allows no permission of potential difference between measurement sensor and housing or converter protection ground.

- Measurement sensor must be fully grounded
- Grounding conductor should not transfer any disturbing voltage.
- Grounding conductor is not allowed to be connected to other electrical equipment at the same time.

4.4 Connected to Power

Danger!

The equipment must be grounded in accordance with regulations so as to protect the operator from electrical shock.

220VAC Power Supply

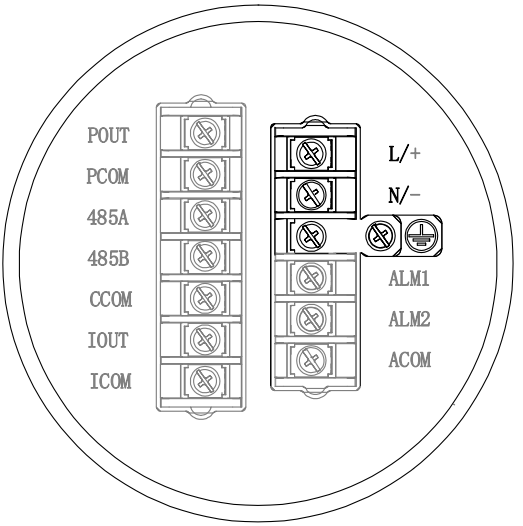

Tips!

Including allowed band: 100VAC -240VAC, 50Hz-60Hz

- L: AC phase line;
- N: AC neutral line;
- ⏚: Connect ground wire to the ground screw.

24VDC Power Supply

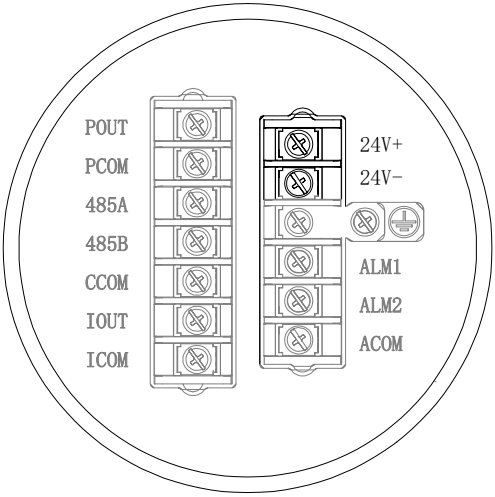

Tips!

Allowance range: 22VDC -26VDC

- 24V+:Power supply positive pole;
- 24V-:Power supply negative pole.

4.5 Output introduction

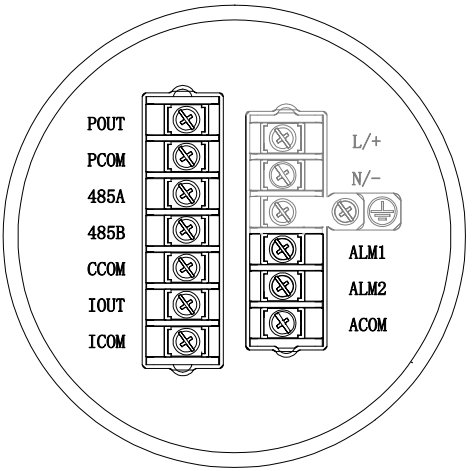

Current Output

- IOUT、ICOM: 4-20mA output
- Active mode: when load $R_L \leq 750\Omega$; $I_{max} \leq 22mA$
- Current flow percent

Communication output

- 485A、485B: 485 Serial communication output;
- CCOM: 485 Serial communication ground;
- Agreement: Modbus-RTU。

Alarm output

- ALM1 ALM2: alarm output terminals;
- ACOM: alarm public terminals;

Pulse, Frequency output

- Corresponding terminal is POUT、PCOM
- Active mode: High 24V, 5mA drive current
- Output electrical isolation: photoelectric isolation, isolation voltage: > 1000VDC;
- Scale:

  Frequency output: Frequency 2KHz(configurable 0-5kHz)

  Corresponding to the upper limit of the flow range;

  Pulse output: corresponding flow rate volume of each pulse (configurable), output Pulse width: 0.1ms ~100ms, duty cycle 1:1, Fmax<= 5000 cp/s;
- Elementary diagram:

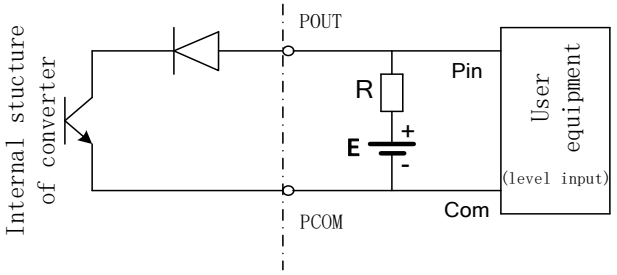

Additional remarks : pulse output for OC gate output, need external power supply. General counter all wear resistance, signal can be directly connected to the counter.

Manufacturer recommendations: upper pull resistance R is recommended to use 2 k, 0.5 W resistor, another power E recommended 24 v dc power supply.

Chapter 5 Startup

5.1 Power on

Please check whether the instrument installation is correct before power on .including :

- The meter must be installed under safety compliance.
- Power supply connection must be performed in accordance with the regulation.
- Please check the electrical connection in the power supply is correct.

  Tighten the converter shell back cove

5.2 Converter startup

Measuring instrument consists of measuring sensor and signal converter, the supply has been already in a state of putting-in-service.

All the operation data and engineering contents have been set according to customer order. It will have a self-check after turning on the power supply. After that, measuring instrument will immediately begin to measure and display the current values.

Startup picture

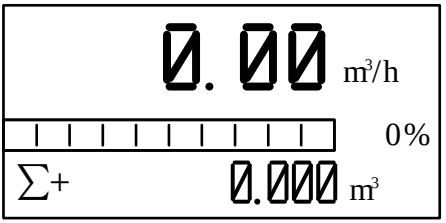

Chapter 6 Operation

6.1 Flow display and operation Button

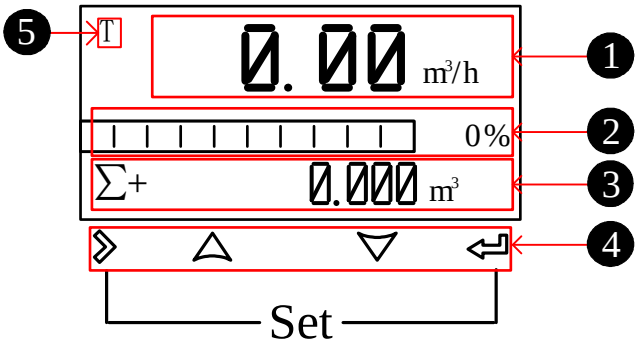

1. Flow line 1

   Default：Flow

   Optional：Flow, Accu fwd (∑+: Positive flow accumulation), Accu rev(∑-: Negative flow accumulation) and Accu net (Σ: Net flow accumulation).

   Optional (loop)：Flow, Accu fwd, Accu rev, Accu net and OFF.

2. Flow line 2

   Default：Flow bar

   Optional：Flow bar, Accu fwd, Accu rev, Accu net, Flow vel (current flow rate) and MT (current conductivity).

   Optional (loop)：Flow bar, Accu fwd, Accu rev, Accu net, Flow vel, MT and OFF.

3. Flow line 3

   Default：Accu fwd

   Optional：Flow bar, Accu fwd, Accu rev, Accu net, Flow vel and MT.

   Optional (loop)：Flow bar, Accu fwd, Accu rev, Accu net, Flow vel, MT and OFF.

Tips:

1. You can modify the parameters of [flow line 1/2/3] and [flow line 1/2/3 loop] in flow configuration 12, and the cycle interval of each parameter is 10s.

2. When alarm occurs, the cycle interval of the alarm information (including empty pipe, high flow alarm, low flow alarm, overrun pulse limit alarm and overrun flow limit) screen is 5S and the duration is 2S. This information occupies flow line 2 and 3 in the display screen, as shown in the following figure.

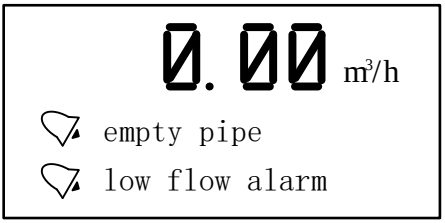

4. Operation keys: mechanical keys

Signal	Measuring Mode	Menu Mode	Function Mode	Data Mode
⟫	-	switch menu categories	-	Data right shift
↵	Switch accumulative amount	Switch menu subclass	confirmation	Confirm data
△ ▽	-	-	selection	Change data
⟫ + ↵	Enter menu	Exit menu	-	-

5. Test Flag

The test flow rate is disabled by default (allowing the test parameter to be set to "N"). When the test parameter is allowed to be set to "N", the test flag "T" is not displayed. When the test flow rate is turned on (allowing the test parameters to be set to "Y"), the test flag "T" is displayed in the upper left corner of the main interface.

6.2 Flow parameter display interface

Press and hold the button △ for 8 seconds on the main interface to enter the flow parameter display interface, as shown in the following figure. Press the key ≫ to exit.

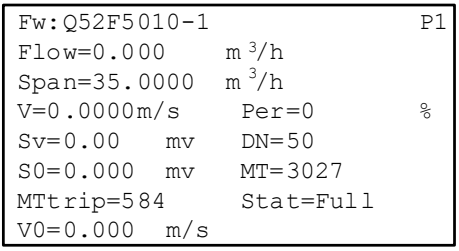

P1: First page

Parameter	Meaning
Fw	Program version number
Flow	Instantaneous flow rate
Span	Range
V	Velocity of flow
Per	Hundred components
Sv	Signal mv
DN	Caliber
S0	Zero point mv
MT	Real time conductivity conversion rate
MTtrip	Air traffic control threshold
Stat	Air traffic control status
V0	Zero correction flow rate

Press the key △ on the first page of the flow parameter display interface to switch to the second page, as shown in the following figure.

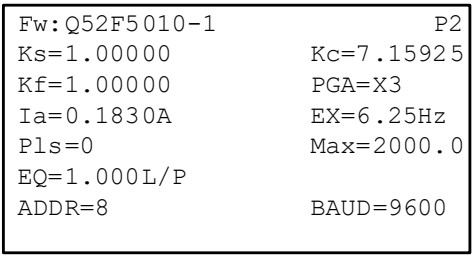

P2：The second page

Parameter	Meaning
Fw	Program version number
Ks	Sensor coefficient
Kc	Converter coefficient
Kf	Fullness coefficient
PGA	Gain
Ia	Exciting current
EX	Excitation frequency
Pls	Pulse output type
Max	Upper frequency limit
EQ	Pulse output equivalent
ADDR	Communicate address
BAUD	Baud rate

6.3 Perating instructions for mechanical keys

Please open the converter cover before handling mechanical keys.

Mechanical key to enter configuration mode operation as shown in the next section.

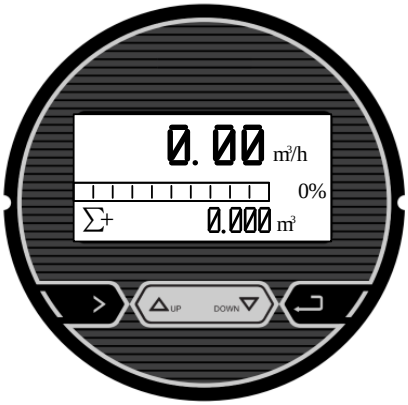

6.4 Operating instruction

Parameter selection and adjustment

Press ⟫ and ⏎ together , enter into parameter setting interface .

Password need to be input by then

Initial users password: 200000(used for modifying the user level parameter)

Initial manufacture password:100000 (used for modifying the manufacture level parameter)

Initial manufacture password:300000 (to set up parameter quickly)

After entering the configuration parameters , the parameters can be modified by the following operation :

User can conduct the switch operation in the menu by pressing the ⟫ button , switch among the parameter item of menu by pressing the ⏎ button, and store a modified parameter value at the same time , adjust the parameter value by pressing the ⌃ and ⌄ buttons.

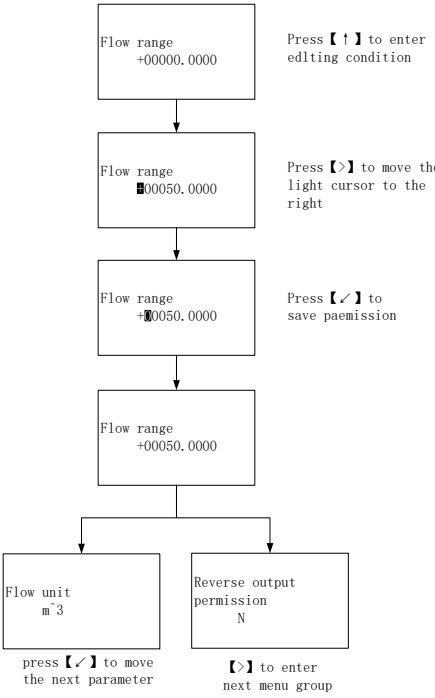

Flow setup and analog output menu

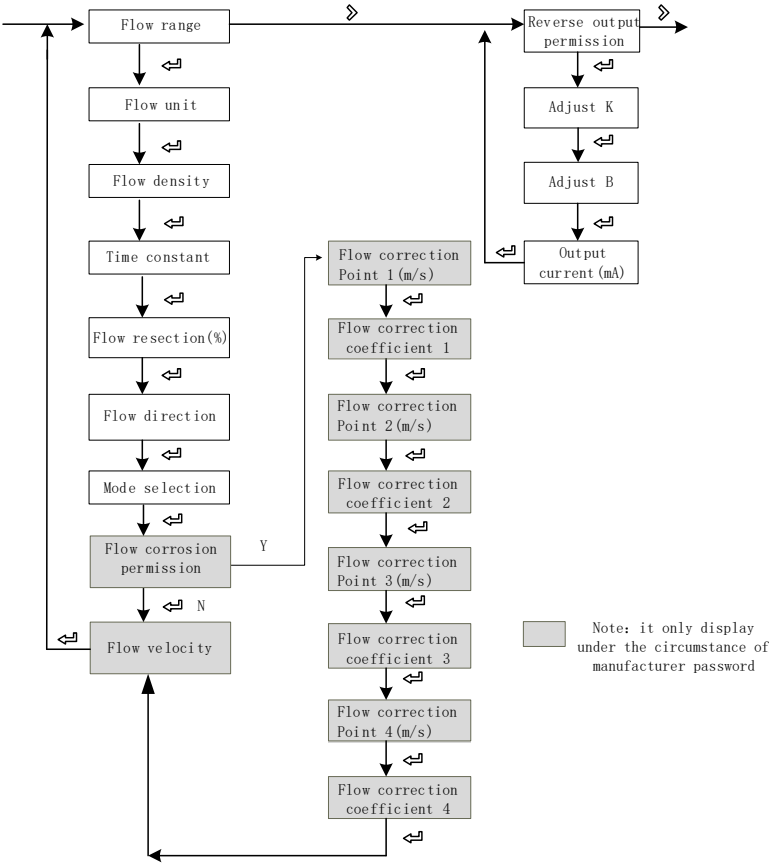

Pulse output and total set menu

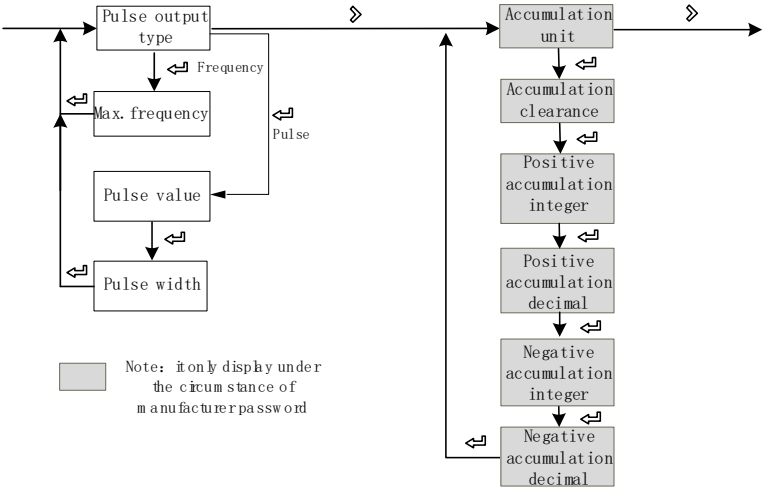

Alarm setup menu

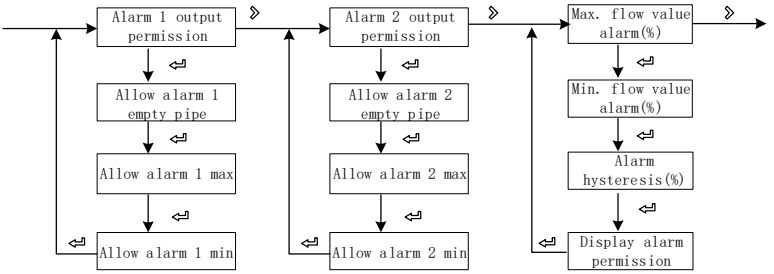

System function, empty pipe function , sensors function, test function setup menu

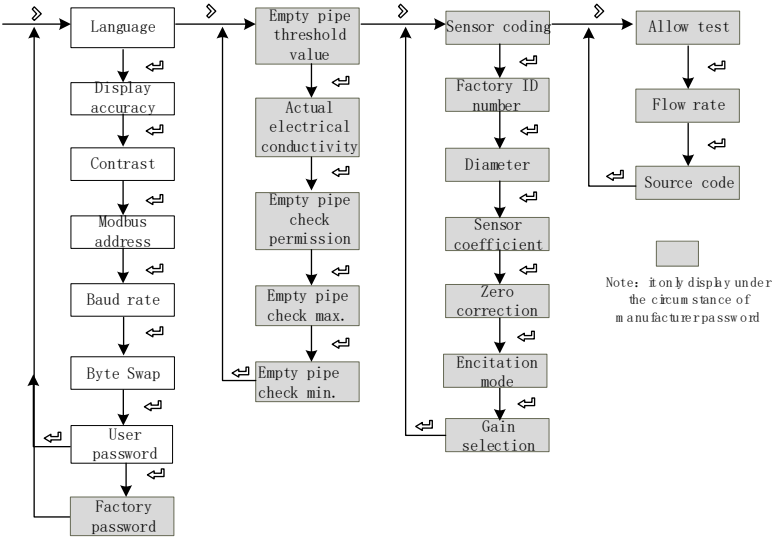

6.5 Configuration details

NO.	Parameter	Setting mode	Password level	Parameter range	Default
1-Flow rate					
1-0	Flow range	Figure	User	0-99999	35.000
	Set the maximum flow limit value. Used to calculate the frequency, output current limit calculation; Alarm threshold calculation, etc				
1-1	Flow unit	Option	User	L、m^3、Kg、t、gal、Igal /s、min、h	m^3/h
	Choose L, m^3, gal, Igal such as volume unit, the density will not participate in calculation; Choose Kg, t, such as mass unit, need to cooperate with 1-2 density parameter.				
1-2	Fluid density	Figure	User	0.000-99.000	1.000
	Used to calculate the mass flow rate, QM =ρV_M when flow volume unit is volume unit t, this parameter will not be displayed. Density of the unit：g/cm^3				
1-3	Time constant	Figure	User	0-99S	2s
	Damping coefficient of the filter, select the parameters of the selected period of time as the average of the instantaneous flow				
1-4	Flow resection	Figure	User	0-10%	1%
	Flow volume is regarded as zero if it is below the setting value Zero means not remove				
1-5	Flow direction	Option	User	Positive, Negative	Positive
	Used to change the direction of flow, when the user signal lines negative pole and positive pole are reverse connection, or reverse sensor installation, use this feature				
1-6	Mode selection	Option	User	Positive,Negative Bidirection	positive
	Set the direction of the flow measurement, forward direction indicates only for forward direction measurement flow, reverse indicate only measure the reverse flow, two-way indicate two-way flow measurement				
	The peak amplitude (it is not shown when peak inhibition allows configuration closing)				
1-10	Flow correction permission	Option	User	Y、N	N
	Indicates whether start using flow nonlinear correction function. For detailed description, please refer to chapter [operation instructions of flow correction function].				
1-11	Flow correction point 1	Figure	Factory	0.0-99.999	0
	Flow rate modified point 1, when The flow rate function shut down , this parameter does not display.				

1-12	Flow correction coefficient 1	Figure	Factory	0.0-99.999	1.000
	Flow rate correction factor 1, when The flow rate function shut down , this parameter does not display.				
1-13	flow correction point 2	Figure	Factory	0.0-99.999	0
	Flow rate modified point 2, when The flow rate function shut down , this parameter does not display.				
1-14	Flow correction coefficient 2	Figure	Factory	0.0-99.999	1.000
	Flow rate correction factor 2, when The flow rate function shut down , this parameter does not display.				
1-15	Flow correction point 3	Figure	Factory	0.0-99.999	0
	Flow rate modified point 3, when The flow rate function shut down , this parameter does not display.				
1-16	Flow correction coefficient 3	Figure	Factory	0.0-99.999	1.000
	Flow rate correction factor 3, when The flow rate function shut down , this parameter does not display.				
1-17	Flow correction point 4	Figure	Factory	0.0-99.999	0
	Flow rate modified point 4, when The flow rate function shut down , this parameter does not display.				
1-18	Flow correction coefficient 4	Figure	Factory	0.0-99.999	1.000
	Flow rate correction factor 4, when The flow rate function shut down , this parameter does not display.				
1-24	Flow velocity (m/s)	Figure	Factory	1.000-24.000	12.000
	Used to set the upper limit absolute value of the measured flow rate. The default flow velocity is 12m / s.				

2-Current output					
2-0	Reverse output permission	Option	User	Y，N	N
	When Flow rate is reverse ,whether 4-20 ma output is needed , pulse/frequency; Flow rate is forward , It cannot be shut down				
2-1	Adjust K	Figure	User	-99.999~99.999	01.000
	Used for adjusting the output current value，I = Kx + B				
2-2	Adjust B	Figure	User	-99.999~99.999	00.000
	Used for adjusting the output current value，I = Kx + B				
2-3	Output current	Display	User	4.00-20.00	--
	Display the current output of current value(mA)				
3- Pulse/frequency/alarm output					
3-0	Pulse output type	Option	User	Frequency、Pulse	Frequency
	Optional frequency ,pulse equivalent/alarm output.				
3-2	Max. frequency	Figure	User	0-5000	2000
	Set the corresponding value of the instantaneous flow upper limit ; when select for frequency output , this parameter display.				
3-3	Pulse value (L/P)	Option	User	0.001-999.999	1.0
	Set the cumulant that each pulse stand for ; When selecting is the pulse output, this parameter display.				
3-4	Pulse width (ms)	Option	User	10ms、20ms、50ms、100ms、200ms、50%	50%
	Set Pulse width. When selecting is the pulse output, this parameter display.				

4-Accumulation					
4-0	Accumulation unit	Option	Factory	m^3、kg、t、gal、Igal、L	m^3
	Accumulation unit.				
4-1	Accumulation clearance	Option	Factory	Y、N	N
	Clear accumulation amount				
4-2	Positive accumulation integer	Figure	Factory	0-999999999	0
	Set total positive integer part				
4-3	Positive accumulation decimal	Figure	Factory	0.0-0.999	0.0
	Set total positive decimal part				
4-4	Negative accumulation integer	Figure	Factory	0-999999999	0
	Set reverse total integer part				
4-5	Negative accumulation decimal	Figure	Factory	0.0-0.999	0.0
	Set reverse total decimal part				

5-Alarm contacts 1					
5-1	Alarm1 output permission	Option	User	Y/N	N
	Allow touch spot 1 output main switch , when set to N, the following parameters do not display.				
5-3	Allow alarm1 empty pipe	Option	User	Y/N	N
	Allow empty pipe alarm output switch, the system detects empty pipe, contact 1 output alarm signal automatically. When allowed alarm output configuration as N, this parameter does not display.				
5-4	Allow alarm1 max.	Option	User	Y/N	N
	Allow flow rate upper limit alarm output switch , when the instantaneous flow is greater than the flow rate lower limit value, touch spot 1 output alarm signal automatically. The instructions are specific Settings in 7-1. When allowed to alarm output configuration for N, this parameter is not displayed.				
5-5	Allow alarm1 min.	Option	User	Y/N	N
	Allow flow rate lower limit alarm output switch , when the instantaneous flow is less than the flow rate lower limit value, touch spot 1 output alarm signal automatically. The instructions are specific Settings in 7-2. When allowed to alarm output configuration for N, this parameter is not displayed.				
6-Alarm contacts 2					
6-1	Alarm2 output permission	Option	User	Y/N	N
	Allow touch spot 2 output main switch , when set to N, the following parameters do not display.				
6-3	Allow alarm2 empty pipe	Option	User	Y/N	N
	Allow empty pipe alarm output switch, the system detects empty pipe, contact 2 output alarm signal automatically. When allowed alarm output configuration as N, this parameter does not display.				

6-4	Allow alarm2 max.	Option	User	Y/N	N
	Allow flow rate upper limit alarm output switch , when the instantaneous flow is greater than the flow rate lower limit value, touch spot 2 output alarm signal automatically. The instructions are specific Settings in 7-1. When allowed to alarm output configuration for N, this parameter is not displayed.				
6-5	Allow alarm1 min.	Option	User	Y/N	N
	Allow flow rate lower limit alarm output switch , when the instantaneous flow is less than the flow rate lower limit value, touch spot 2 output alarm signal automatically. The instructions are specific Settings in 7-2. When allowed to alarm output configuration for N, this parameter is not displayed.				
7-Alarm setup					
7-0	Max. flow value alarm	Figure	User	0-999.9%	100%
	Set the upper limit alarm value, measuring range percentage				
7-1	Min. flow value alarm	Figure	User	0-999.9%	0%
	Set the lower limit alarm value, measuring range percentage				
7-2	Alarm hysteresis	Figure	User	0-99.9%	1%
	Used to eliminate the alarm when the disturbance Upper limit elimination conditions: instantaneous flow is less than the upper limit alarm value – return difference Lower limit elimination conditions: instantaneous flow is greater than the upper limit alarm value + return difference				
7-3	Display alarm permission	Option	User	Y/N	N
	Allows the alarm message display onto to the main picture switch				

8-System					
8-0	Language	Option	User	Chinese/English	Chinese
	Set configuration display language				
8-1	Display accuracy	Figure	User	0-4	2
	The instantaneous volume of decimal digits				
8-2	Contrast	Figure	User	0-100%	50%
	Contrast ratio of Liquid crystal display				
8-3	Modbus address	Figure	User	1-247	8
	Communication agreement instrument address Based on the RS485 protocol Modbus RTU				
8-4	Baud rate	Option	User	1200、2400、4800、9600、	9600
	Baud rate of serial communication verification mode				
8-5	Even-odd check	Option	User	NONE/ODD/ EVEN	NONE
	Serial communication verification mode of physical layer				
8-6	Byte Swap	Option	User	2-14-3、3-41-2、4-31-2、1-23-4	2-1 4-3
	Byte switching order for serial communication at the physical layer				
8-8	User password	Figure	User	00000-999999	000000
	User-level password for viewing and modifying user-level parameter configurations, User initial password: 200000				
8-9	Factory password	Figure	Factory	00000-999999	000000
	Factory-level password for viewing and modifying user-level parameter configurations, Factory initial password: 100000				
8-18	Bluetooth	Option	User	Y/N	Y
	The Bluetooth function is enabled by default and can be manually turned off. When using the Bluetooth mini program, Bluetooth needs to be turned on and set to "Y".				

9-Empty tube parameters					
9-0	Empty pipe threshold value	Figure	Factory	0-100%	50%
	Empty tube alarm judgement gate value				
9-1	Actual electrical conductivity	Display	Factory		
	Display the measured conductivity equivalent of the fluid. For general natural water: equivalent < 200 when tube is full, when empty tube > 200 (the equivalent is related to the fluid conductivity and the length of measuring line , it is recommended double shielded wire is used when the wiring distance is 20m , otherwise it will affect empty detection function .				
9-2	Empty pipe check permission	Option	Factory	Y , N	Y
	Set whether open empty detection function				
9-3	Empty pipe check max.	Figure	Factory	0-9999	1200
	Measured conductivity equivalent value when the tube is empty, default values can be used for general natural water. which need to observe the empty wipe for special fluid is 9-1 value, write in 9-3				
9-4	Empty pipe check min.	Figure	Factory	0-9999	200
	Measured conductivity equivalent value when the tube is full, default values can be used for general natural water. which need to observe the empty wipe for special fluid is 9-1 value, write in 9-4				
9-5	Empty pipe check hysteresis	Figure	Factory	0-9999	30
	Hysteresis value for empty pipe check, default values can be used within 20 meters of the signal line.				
9-6	Empty pipe check num	Figure	Factory	0-99	05
	Set the number of empty pipe check. When the empty pipe signal of this number is continuously detected, an empty pipe alarm will be triggered.				

10-Sensor					
10-0	Sensor coding	Figure / symbol	Factory	16 digital	
	Used for dentify sensors				
10-1	Factory ID number	Figure	Factory	6 digital	
	Identification number				
10-2	Diameter	Option	Factory	3-2000	50
	Sensor size				
10-4	Sensor coefficient	Figure	Factory	0-99.99999	01.00000
	The flowmeter coefficient was calibrated according to the actual flow volume by sensor manufacture For details, see sensor coefficient calibration section				
10-6	Zero correction	Figure	Factory	-9.9999~9.9999	+0.0000
	Sensor nonlinear correction when used for small flow (below 0.3 m/s) V is the real-time flow rate displayed above, V (after correction) = V (before correction) + zero correction value				
10-7	Excitation mode	Option	Factory	3.125Hz、6.25 Hz、12.5 Hz、25 Hz	6.25Hz
	The choice of excitation frequency: 3.125Hz 、6.25Hz、12.5Hz、25 Hz				
10-9	Gain selection	Option	Factory	1/3/9	3
	Gain choice: adjust the gain can change the range of flow speed Gain adjustment：1、3、9				
11-Test					
11-0	Allow	Option	Factory	Y/N	N
	Set Y allow simulate velocity, the flag "T" is displayed in the upper left corner of the main interface，After the power failure automatically restored to N.				
11-1	Simulate velocity (m/s)	Figure	Factory	-12.000~12.000	1.000
	Set value of simulate velocity，"11-0 allow test" should be set to "Y"				
11-2	Simulate code	Option	Factory	Y/N	N
	After setting Y, the original signal code will be displayed in the running screen. This screen also displays the firmware version and product serial number.				

12-Display					
12-0	Flow line 1	Option	User	Flow、Accu fwd、Accu rev、Accu net	Flow
	A parameter can be selected as the display parameter of flow line 1.				
12-1	Flow line 1 loop	Option	User	Flow、Accu fwd、Accu rev、Accu net、OFF	OFF
	You can turn off or select another parameter as the loop display parameter of flow line 1				
12-2	Flow line 2	Option	User	Flow bar、Accu fwd、Accu rev、Accu net、Flow vel、MT	Flow bar
	A parameter can be selected as the display parameter of flow line 2.				
12-3	Flow line 2 loop	Option	User	Flow bar、Accu fwd、Accu rev、Accu net、Flow vel、MT、OFF	OFF
	You can turn off or select another parameter as the loop display parameter of flow line 2.				
12-4	Flow line 3	Option	User	Flow bar、Accu fwd、Accu rev、Accu net、Flow vel、MT	Accu fwd
	A parameter can be selected as the display parameter of flow line 3.				
12-5	Flow line 3 loop	Option	User	Flow bar、Accu fwd、Accu rev、Accu net、Flow vel、MT、OFF	OFF
	You can turn off or select another parameter as the loop display parameter of flow line 3.				

6.6 Quick setup menu

1. Press on ⟫ and ↵ at same time ,Instrument parameter is set at the interface.Password need to be input at this time.

   Quickly set the password： 300000

2. The user can use the key ⟫ to switch between menu pages, use the key △ and key ▽ to adjust the parameter value, then use the key ⇦ to confirm.
3. The parameters that can be set are shown in the table below.
4. After modification, move to the menu page [exit config], select Y and press on ↵.

NO.	Parameter words	Setting mode	Parameter range	default
1	Diameter(mm)	Option	3-2000	50
2	Flow range	Figure	0-99999	35.000
3	Sensor coefficient	Figure	0-99999	1.000
4	Zero correction	Figure	0-99999	0.0
5	Accumulation clearance	Option	Y、N	N
6	Flow resection(%)	Figure	0-99%	1%
7	Time constant	Figure	0-99S	3s
8	Pulse output type	Option	Pulse、Frequency	Frequency
9	Max.frequency	Figure	0~5000.0	2000.0
10	Pulse value(L/P)	Figure	0~999999.999	1.000

Chapter 7 Functions

7.1 System information

Flow meter itself has the self-diagnosis function, in addition to the power supply and circuit board hardware failures, it can correctly provide the corresponding alarm message to the fault in general application .

Display position in measuring picture

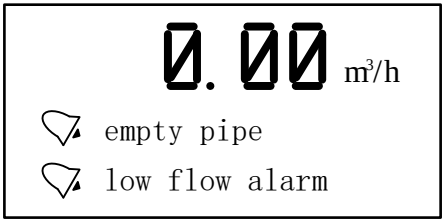

System information sheet

Display	Alarm content
empty pipe	Sensor empty pipe
high flow alarm	The current instantaneous flow rate exceeds the setting flow limit
low flow alarm	The current instantaneous flow rate is below the setting flow lower limit
overrun pulse limit alarm	The pulse output frequency exceeds the setting frequency upper limit
overrun flow limit	The current instantaneous flow rate exceeds the setting flow limit

7.2 Pulse/Frequency/Current output

Pulse equivalent output

It is mainly used for sensor manufacturer coefficient calibration and user measurement use. In the third way configuration parameter Settings:

Pulse equivalent corresponding cumulants, indicate each pulse corresponding to the relevant volume number .

For example：

Parameter setting as 0.1L/p

The current instantaneous flow 3.6m^3/h

Number of pulses per second output is ：3.6×1000/3600/0.1 = 10

Notes：

When the parameter is set to 0.4L/p

The current instantaneous flow is3.6m^3/h

Number of pulses per second output is：3.6×1000/3600/0.4 = 2.5

Encounter the above situation, the decimal part of 2.5 pulse will automatically get into the next second output, data loss will not happen .

The pulse equivalent shouldn't be set too small when the pipe flow is small , otherwise it will cause pulse output exceeds the limit, then the main screen will appear [overrun pulse limit alarm] system alarm information. Users need to reset pulse equivalent parameters. Similarly, when the pipe flow is small the selected pulse equivalent cannot too big, otherwise it will cause the instrument to output a pulse for a long time, cause measurement error .

Pulse equivalent output is different from frequency output, pulse output will output a pulse when a pulse equivalent is accumulated enough , so the pulse output is uneven . Counter instrument should be used when measure pulse output , Frequency meter instrument shouldn't be used.

Frequency output

It is mainly used for manufacturer coefficient calibration and user measurement use. In the third group configuration parameters setting : frequency corresponding to instantaneous flow rate , upper frequency limit corresponding to max. flow rate .

Note: the maximum frequency set to 5000 Hz.

Current output

Mainly used for transmitting output to other intelligent instruments, such as: digital display table, recorder, PLC, DCS, etc.

The current output type：4-20mA.

The current valve corresponding to Instantaneous flow rate , 20 mA corresponding to range limit, 4 mA corresponding to range limit.

Conversion relationship

$$I_{\text{real time}} = \frac{Q_{\text{real time}}}{Q_{\max}} 16.00 + 4.00$$

Unit：mA

Notice：

$Q_{\text{real time}}$ Indicate the instantaneous flow rate

Q_{MAX} Indicate the current instrument range

$I_{\text{real time}}$ Indicate Real time current value

7.3 Serial communication

This instrument provides a standard RS485 serial communication interface, using the international standard MODBUS-RTU communication protocol that supports 04 Read Input Registers command.

Register address

Parameter	Type	Address	Explanation	
Real flow rate	float	30100		
Real flow velocity	float	30102		
Flow percentage	float	30104	50 stands for 50%	
Electric conductivity	float	30106		
Forward flow accumulation of integer	ulong	30108		
Forward flow accumulation of decimal	ulong	30110	The decimal part magnifies 1000 times 123stand for 0.123	
Reverse flow accumulation of integer	ulong	30112		
Reverse flow accumulation of decimal	ulong	30114	The decimal part magnifies 1000 times 123stand for 0.123	
Flow Unit	ushort	30116	0x00:L 0x01:m3 0x02:kg 0x03:t 0x04:gal 0x05:Igal	
Time Unit	ushort	30117	0x00:s 0x01:min 0x02:h	
Flow accumulation Unit	ushort	30118	0x00:L 0x01:m3 0x02:kg 0x03:t 0x04:gal 0x05:Igal	
Alarm Status	ushort	30119	bit	0 = No alarm, 1 = Alarm active
			0	System Alarm
			1	Empty Pipe Alarm
			2	Upper Limit Alarm
			3	Lower Limit Alarm

Note: float/ulong/long type data, Communication transmission in byte order 2-1-4-3; ushort type data Transmission in accordance with 2-1.

According to the Modbus standard, when sending actual read commands, you need to subtract one register offset.

Communication configuration

Mailing address：1-247;

Default address：8;

Baud rate： 1200、2400、4800、9600;

The default baud rate：9600;

Check: no check, odd parity, parity;

Default no check;

For 32-bit data (long plastic or floating point) arranged in the communication frame;

Example：Long integer 16909060(01020304H)： 03 04 01 02

Floating number 4.00(40800000H)： 00 00 40 80

Readout real-time quantity floating-point communications, example:

Real-time Floating-point Numbers readout

Send message：08 04 00 63 00 02 81 4C

Return message：08 04 04 22 6E 41 3F 79 61(Instantaneous flow rate：11.95)

Forward flow rate accumulate readout

Send message：08 04 00 6B 00 04 80 8C

Return message：08 04 08 00 6C 00 00 00 7B 00 00 D6 8E (The cumulative integer：108， Cumulative decimal：0.123，Accumulation：108.123)

7.4 Hart Communication

This instrument provides Hart 6.0 communication interface and supports the following communication commands.

HART command 0: read identification code

Returns the extended device type code, version and device identification code.

Request	
None	
Response	
Byte 0	254
Byte 1	Manufacturer ID
Byte 2	Device type
Byte 3	The minimum number of leading characters requested (master-> slave)
Byte 4	Common command document version number
Byte 5	Device specification version number
Byte 6	Device software version number
Byte 7	(First five bits) device hardware version number, (last three bits) physical signal type
Byte 8	Device mark
Byte 9-11	Device ID No.
Byte 12	Minimum number of preambles to respond (from-> master)
Byte 13	Maximum number of device variables
Byte 14-15	Configuration modification count
Byte 16	Additional equipment status (maintenance required/ parameter alarm)

HART command 1：Read the pivot variable (PV).

Returns the value of the pivot variable as a float type.

Request	
None	
Response	
Byte 0	Unit code for pivot variable
Byte 1-4	Value of pivot variable

HART command 2: read the host variable current value and percentage

Read the host variable current and percentage. The host variable current always matches the AO output current of the device. The percentage is not limited to 0-100%. If the range of the host variable is exceeded, the upper and lower limits of the sensor will be tracked.

Request	
None	
Response	
Byte 0-3	Host variable current，Unit milliamperes (mA)
Byte 4-7	Percentage of host variable range (%)

HART command 3: read dynamic and host variable currents

Read the host variable current and 4 (max) predefined dynamic variables. The host variable current always matches the AO output current of the device. Second variables are defined for each device type. Such as the second variable is the sensor temperature. The third variable is the positive cumulative large number of flow (6-digit significant data), and the fourth variable is the positive cumulative tail number of flow (excluding the remaining data of the first 6 significant data). Accumulation=third variable + fourth variable;

Request	
None	
Response	
Byte 0-3	Host variable current，unit milliamperes (mA)
Byte 4	host variable unit code
Byte 5-8	host variable value
Byte 9	Second variable unit code
Byte 10-13	Second variable value
Byte 14	Flow accumulation unit code
Byte 15-18	Positive flow accumulation large number
Byte 19	Accumulated flow unit code
Byte 20-23	Positive flow accumulation tail number

HART Command 6: Write Polling Address

This command writes Polling address to the device, which is used to control the output of the host variable AO and provide the device identification.

Only when the device's Polling address is set to 0, the device's host variable AO can be output. If the address is 1 ~ 15, AO is inactive and does not respond to the application process. At this time, AO is set to the minimum, and set the third bit of the transmission state-the analog output of the host variable is fixed; the upper / lower limit alarm is invalid. If the Polling address is changed back to 0, the host variable AO is active again and can respond to the application process.

The second byte returns whether the device is in current mode. The following commands can be used only when current mode is enabled:

- 40 #: Enter / exit fixed current mode
- 45 #: Adjust current zero point
- 46 #: Adjust the current gain
- 66 #, 67 #, 68 #: Analog output mode

Request	
Byte 0	Polling address of the device
Byte 1	Current mode code
Response	
Byte 0	Polling address of the device
Byte 1	Current mode code

HART Command 14: Read Master Variable Sensor Information

Read host variable sensor serial number, the sensor upper / lower limit (span) unit code, the host variable sensor upper limit, the host variable sensor lower limit, and the minimum sensor accuracy. The unit of the sensor upper / lower limit / minimum accuracy (Span) is the same as the unit of the host variable.

Request	
None	
Response	
Byte 0-2	host variable sensor serial number
Byte 3	host variable sensor upper and lower limits and minimum precision unit code (Enum)
Byte 4-7	host variable sensor upper limit
Bytes 8-11	host variable sensor lower limit
Bytes 12-15	Minimum variable sensor accuracy

HART Command 15: Read Device Information

Read host variable alarm selection code, host variable transfer function code, host variable range unit code, host variable upper limit value, host variable lower limit value, host variable damping value, write protection code, and host publisher code.

The primary variable damping value is used for equipment range percentage and variable current.

Request	
None	
Response	
Byte 0	host variable alarm selection code (Enum) (useless)
Byte 1	Transfer function code (Enum) of host variable (useless)
Byte 2	Unit code of the upper and lower range value of the host variable (Enum)
Bytes 3-6	host variable upper limit
Bytes 7-10	Lower limit of the host variable
Bytes 11-14	host variable damping value, unit is second
Byte 15	Write Protected Code (Enum) (useless), fixed value=251 (without write protection function)
Byte 16	Manufacturer ID (configuration A5-0), default is 250
Byte 17	host variable analog channel flag, whether it is a field device analog input channel (useless)
Bytes 18-20	Date (useless)

Command 34: Write the host variable damping value

This is a command about host variables.

The host variable damping value represents a time constant (by that time, the output to the step response should be 63% of the steady state value). Both the analog and digital outputs of the variable use this variable.

Request	
Byte 0-3	Damping value of host variable, unit is second
Response	
Bytes 0-3	Actual primary variable damping value, unit is second

Command 35: Write host variable range value

This is a command about the range of the host variable.

The upper limit and lower limit of the host variable range are independent. Most devices allow the upper limit of the range of the device to be lower than the lower limit, so that the device works in reverse output.

The host variable unit received by this command does not affect the host variable unit of the device. The host variable range value is returned in the receiving unit.

Request	
Byte 0	host variable range unit code
Bytes 1-4	Upper limit of host variable range
Byte 5-8	Lower limit of host variable range
Response	
Byte 0	host variable range unit code
Bytes 1-4	Upper limit of host variable range
Bytes 5-8	Lower limit of host variable range

Command 40: Enter / exit fixed host variable current mode

This is a command about loop current.

The device is configured as a fixed host variable current mode, and the response value shows the actual current value of the current device.

If the request value is set to "0", it will exit the fixed current mode, and it also will exit when the device is powered off.

Request	
Byte 0-3	Fixed main variable current value, unit is milliampere
Response	
Byte 0-3	Actual fixed main variable current value, unit is milliampere

Command 44: Write host variable units

This is a command about host variables.

Select a host variable unit. Both the host variable value and the range are returned in that unit. The host variable sensor upper and lower limits and the minimum precision Span of the host variable also use this value as a unit.

Request	
Byte 0	host variable unit code (Enum)
Response	
Byte 0	host variable unit code (Enum)

Command 45: adjust loop current zero

This is a command about loop current.

Adjust the loop current value to 0 or the lower limit value, usually set the loop current to 4.00mA. The current value sent may be rounded or truncated, and the current value will be returned.

If the device does not enter the correct loop current mode or the current is not set to the exact minimum value, need to return response code 9 --- incorrect current mode or value.

Request	
Byte 0-3	External measured current value, unit is milliampere
Response	
Byte 0-3	Actual measured host variable current value, unit is milliampere

Command 46: Adjust loop current gain

This is a command about loop current.

Adjust the loop current value to the maximum, usually set the loop current to 20.00mA. The current value sent may be rounded or truncated, it will return to the present current value.

If the device does not enter the correct loop current mode or the current is not set to the exact minimum value, need to return response code 9 --- incorrect current mode or value.

Request	
Byte 0-3	Externally measured host variable value, unit milliampere
Response	
Byte 0-3	Actual measured main variable current value

Command 59: Write the number of response leaders

This is a data link layer management command and is only applied to asynchronous physical layer links, such as FSK.

This command selects the minimum number of preambles to send before the response packet starts. This number includes the two leading characters contained in the message header. The number may be set to 5-20.

Request	
Byte 0	number of preambles to send in response message
Response	
Byte 0	number of preambles to send in response message

Example: adjusting the loop current zero

The 4-20mA loop transmits a dynamic master variable through an analog signal, which requires that the loop current value between the master and the slave must be uniform. The loop current command allows the host to impose a loop current value on the field device and perform two-point adjustment of the field device loop current value (corresponding to zero and span). The loop current adjustment process is as follows:

1. Enter / exit the fixed current mode through command No. 40, and set the current to the minimum value of the device, usually 4mA;

2. Through command 45, adjust the zero point of the loop current. After the device is adjusted, it returns the current value, which may be different from the host setting due to rounding;

3. Enter / exit the fixed current mode by command No. 40, and set the current to the maximum value of the device, usually 20mA;

4. Through command 46, adjust the loop current gain.

5. If you need to be more precise, repeat steps 1-4. After the loop current is calibrated, exit the fixed current mode (set 0mA) through command 40.

7.5 Bluetooth Mini Program Description

This instrument provides Bluetooth mini program function, which is enabled by default and can be set in instrument configuration 8-18 to disable the Bluetooth mini program function。

By scanning the mini program code provided by the manufacturer, you can enter the Bluetooth assistant mini program interface.

Online, search for nearby Bluetooth instruments.

1. The default value for the Bluetooth instrument name is the instrument type plus the device number. If the Sensor Bit Number on the instrument is not 0, the Sensor Bit Number will be used as the Bluetooth instrument name.
2. When clicking on the instrumentation card to enter the Instrumentation Overview page, the mini program automatically establishes a Bluetooth connection with the instrumentation. When returning or exiting the mini program from the Instrumentation Overview page, the Bluetooth connection is automatically disconnected.
3. You can enter the Offline Instrumentation page through the Menu.

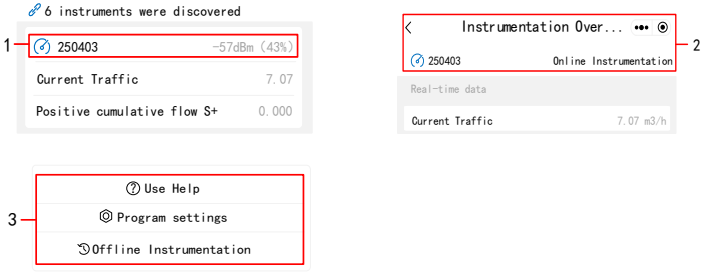

Instrumentation Overview, establish Bluetooth connection with the instrument, read version and Sensor Bit Number, and read configuration.

1. When entering the Instrumentation Overview page, the instrument version will be read.
2. After completing the version reading, the Instrumentation Version and Instrumentation number will be updated.
3. After completing the configuration reading, Real-time data will automatically add units and display some Instrumental parameters.
4. After completing the configuration reading, Real-time data is read every second and the display is updated.
5. After completing the configuration reading, update the data to the Offline Instrumentation list. Exiting the page before completing the configuration reading operation will not update the data to the Offline instrument list.
6. Click on the Menu ->View the modified configuration to enter the Instrumentation configuration page.
7. Click on the Menu ->Record instrument data to enter the Data records page.
8. The Instrumentation Overview page displays instrumentation types in the upper right corner, which are divided into Online instrumentation, Offline instrumentation, and Share instrumentation.

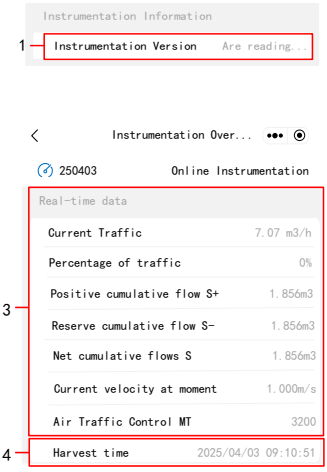

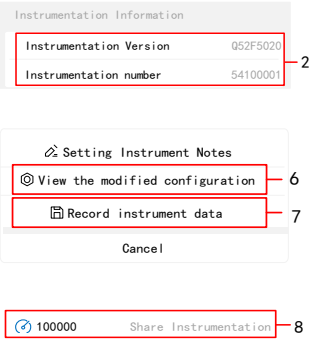

Data records, real-time recording of instantaneous flow rate of instruments, numerical statistics, and modification of recording configurations.

1. Enter the data recording screen to view the instantaneous flow rate and real-time curve of instantaneous flow rate.
2. Real time data list of instantaneous flow.
3. Click on the Menu to set Stop recording and Start recording.





Instrument configuration, view and modify instrument configuration.

1. The top of the instrument configuration page displays instantaneous flow rate for real-time preview of real-time data when modifying the configuration.
2. Before modifying any configuration item, it is necessary to verify the configuration password, which must be consistent with the password set by the instrument.
3. If the default configuration password of the instrument has not been modified before leaving the factory, the instrument button must be operated before entering the password to accept the default configuration password.
4. You can only see the manufacturer configuration after entering the manufacturer password, and you can only see the user configuration before entering any password.
5. After clicking on the configuration item to modify a single configuration value, it will be immediately downloaded.
6. When entering the instrument configuration page through offline instrument pages or shared instruments, only the configuration can be viewed and cannot be modified.
7. If the password is entered correctly, it will be remembered and the password will be automatically filled in the next time the password dialog box is opened. Users only need to press confirm to enter the password

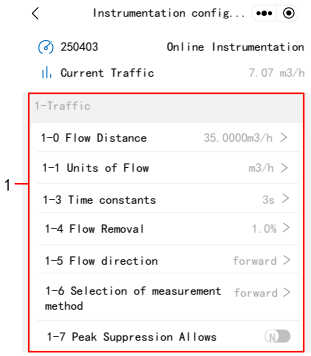

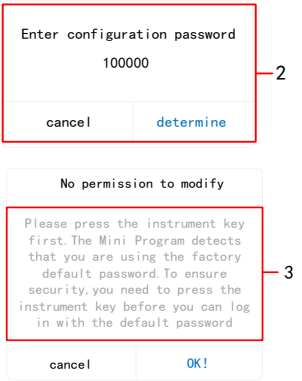

Offline instrumentation, online instrumentation that have been accessed before will be saved on the phone and can be viewed at any time through the Offline instrumentation.

When there are no offline instrumentation records, entering the offline instrumentation page will prompt whether to create a demo instrumentation.

1. Long press the instrumentation card to delete the instrumentation.
2. Click on the online instrument card to enter the instrument overview and read the complete configuration data before adding or updating offline instrument data.
3. If you need to view the manufacturer's configuration for an offline instrument, you need to enter the instrument configuration page and enter the manufacturer's password when accessing the online instrument. Only when you have viewed the manufacturer's configuration while accessing the online instrument, can you view the offline instrument.

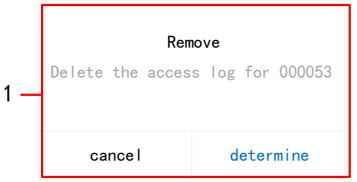

Instrument sharing

1. Share the instrument through the forwarding function in the mini program menu (•••).
2. The online instrument page shares the homepage of the mini program and does not contain any data.
3. The instrument overview, instrument configuration, and data recording pages share instrument data. If the instrument configuration and data recording pages are shared, opening the sharing link will automatically enter the corresponding page. The icon ⌂ in the upper left corner of the instrument overview page that shares the link can enter the online instrument page.
4. Online instruments, offline instruments, and shared instruments can all be forwarded. Shared online instruments should be shared after reading the configuration.
5. The shared instrument can be opened on WeChat PC to view the instrument overview, configuration, and data records.

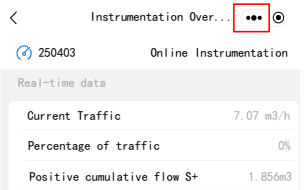

7.6 Firmware upgrade instructions

1. Connect the instrument and computer through RS485 serial communication interface, open [DFU firmware online upgrade] software, and click [next].
2. Enter the [1/5 open upgrade package] interface, click the folder and select the given upgrade package file. The file name is: current version → upgrade version, and the format is [. dfu], such as [Q52F3006 → Q52F3010. dfu], then click [next]
3. Enter the [2/5 communication configuration] interface and select [serial port], [communication address], [baud rate], [verification method] (It is consistent with the parameters set in the instrument).
4. Enter the [3/5 connect instrument] interface, confirm that the [instrument string code] is the firmware version of the current instrument, and click [next].
5. Enter the [4/5 upgrade warning] interface and enter the [upgrade authorization code] provided by the manufacturer. To upgrade the 485 communication firmware online, you should first adjust the instrument screen to [11-2 Source code], select [Y], and then click [next] of DFU software.
6. Enter the [5/5 download firmware] interface, wait for the firmware upgrade to display [finish], and click [finish]. Enter the instrument configuration interface and confirm the firmware version in the upper right corner.

7.7 Operation instructions of flow correction function

In principle, used for small flow rate less than (0.5 m/s) linear adjustment. Correction calculation is conducted on the original sensor flow coefficient curve correction, therefore, should be closed nonlinear correction function, mark sensor coefficient. Then allow the nonlinear correction function, according to the nonlinear of sensor, setting correction coefficient, piecewise corrected. If the coefficient is set right, no need to calibration.

The functional design with 4 period of correction, is divided into four flow point and correction coefficient.

The corresponding velocity of correction point must meet:

Correction point 1 ≥ Correction point 2 ≥ Correction point 3 ≥ Correction point 4 ≥ 0.

The original velocity stand for the real standard velocity, the revised flow velocity is called modified velocity, the modified computation formula is as follows:

- The original flow velocity ≥ The modified point 1

  The flow velocity keep unchangeable.
- At the interval of the modified point 1 > The original flow velocity ≥ The modified point 2

  The modified flow velocity = Correction factor 1 × The original flow velocity
- At the interval of the modified point 2 > The original flow velocity ≥The modified point 3

  The modified flow velocity = Correction factor 2 × The original flow velocity
- At the interval of the modified point 3 > The original flow velocity ≥ The modified point 4

  The modified flow velocity = Correction factor 3× The original flow velocity
- At the interval of the modified point 4 > The original flow velocity ≥ 0

  The modified flow velocity = Correction factor 4× The original flow velocity

Note: when set the modified point, should keep the following relationship Modified point 1 > Modified point 2 > Modified point 3 > Modified point 4 > 0The intermediate value of Correction coefficient is 1.0000, if the correction coefficient is greater than 1 , then increase the flow velocity ; if the correction coefficient is less than 1 , then decrease the flow velocity.

Case1:

The original flow velocity:0~0.4m/s, correction factor changes to 1.2.

Parameter setting

Flow correction point 1	Flow correction point 2	Flow correction point 3	Flow correction point 4
0.4	0	0	0
Flow correction coefficient 1	Flow correction coefficient 2	Flow correction coefficient 3	Flow correction coefficient 4
1.2	1	1	1

The modified flow velocity

The original flow velocity	The modified flow velocity
0~0.4m/s	1.2 × The original flow velocity

Case2:

The original flow velocity:0.2~0.4m/s, correction factor changes to 0.9.

The original flow velocity:0.4~0.5m/s, correction factor changes to 1.1.

Parameter setting

Flow correction point 1	Flow correction point 2	Flow correction point 3	Flow correction point 4
0.5	0.4	0.2	0
Flow correction coefficient 1	Flow correction coefficient 2	Flow correction coefficient 3	Flow correction coefficient 4
0.9	1.1	1	1

The modified flow velocity

The original flow velocity	The modified flow velocity
0.2~0.4m/s	0.9 × The original flow velocity
0.4~0.5m/s	1.1 × The original flow velocity

Case3:

The original flow velocity:0.1~0.2m/s, correction factor changes to 0.9.

The original flow velocity:0.2~0.3m/s, correction factor changes to 1.1.

The original flow velocity:0.3~0.4m/s, correction factor changes to 0.8.

Parameter setting

Flow correction point 1	Flow correction point 2	Flow correction point 3	Flow correction point 4
0.4	0.3	0.2	0.1
Flow correction coefficient 1	Flow correction coefficient 2	Flow correction coefficient 3	Flow correction coefficient 4
0.8	1.1	0.9	1

The modified flow velocity

The original flow velocity	The modified flow velocity
0.1~0.2m/s	0.9 × The original flow velocity
0.2~0.3m/s	1.1 × The original flow velocity
0.3~0.4m/s	0.8 × The original flow velocity

Case4:

The original flow velocity:0.1~0.2m/s, correction factor changes to 0.9.

The original flow velocity:0.3~0.4m/s, correction factor changes to 1.1.

Parameter setting

Flow correction point 1	Flow correction point 2	Flow correction point 3	Flow correction point 4
0.4	0.3	0.2	0.1
Flow correction coefficient 1	Flow correction coefficient 2	Flow correction coefficient 3	Flow correction coefficient 4
1.1	1	0.9	1

The modified flow velocity

The original flow velocity	The modified flow velocity
0.1~0.2m/s	0.9 × The original flow velocity
0.3~0.4m/s	1.1 × The original flow velocity

Case5:

The original flow velocity:0~0.2m/s, correction factor changes to 0.9.

The original flow velocity:0.2~0.3m/s, correction factor changes to 1.1.

The original flow velocity:0.3~0.4m/s, correction factor changes to 0.8.

The original flow velocity:0.4~0.5m/s, correction factor changes to 0.9.

Parameter setting

Flow correction point 1	Flow correction point 2	Flow correction point 3	Flow correction point 4
0.5	0.4	0.3	0.2
Flow correction coefficient 1	Flow correction coefficient 2	Flow correction coefficient 3	Flow correction coefficient 4
0.9	0.8	1.1	0.7

The modified flow velocity

The original flow velocity	The modified flow velocity
0~0.2m/s	0.7 × The original flow velocity
0.2~0.3m/s	1.1 × The original flow velocity
0.3~0.4m/s	0.8 × The original flow velocity
0.4~0.5m/s	0.9 × The original flow velocity

Chapter 8 Technical parameters

8.1 Technical parameters

Measuring system

Measuring principle	Faraday's law of electromagnetic induction	
Function	Instantaneous flow rate, flow velocity, mass flow (when the density is constant), real-time measurement and flow accumulation	
Module configuration	Measurement system is made up of signal converter and measurement sensor.	
Flow meter		
Protection class	IP65	
Pipeline sensor		
Nominal Diameter	DN15-DN1000	
Flange	In line with GB / T9119-2000 standard carbon steel (Optional stainless-steel flanges), another standard flange can be customized	
Pressure rating	DN15 – DN50, PN≤4.0MPa	
	DN65 - DN150, PN≤1.6MPa	
	DN200 – DN600, PN≤1.0MPa	
	DN700 – DN1000, PN≤0.6MPa	
Lining Material	Chloroprene rubber (CR),Polytetrafluoroethylene (PTFE/F4),	
Electrode Material	316L Stainless Steel,	
Protection class	IP68	IP65
Medium temperature	-25 – 180℃	-10 – 80℃
Buried depth	Less than 5 meters (only IP68 protection of split type sensor)	
Immersion depth	Less than 3 meters (only IP68 protection of split type sensor)	

Technical parameters

Plug in sensor		
Nominal Diameter	DN100 ~ DN3000	
Flange	In accordance with GB9119 standard, stainless steel	
Classes	1.6MPa（2.5 MPa Customizable）	
Sensor housing material	Stainless steel	
Sensor structure material	Stainless steel/PVDF	
Electrical conductivity	≥5μs/cm(customizable below5μs/cm)	
Electrode	316L Stainless Steel, Hastelloy C, Hastelloy B, Ti, Ta, Pt	
Protection class	IP65	IP65/IP67(Sensor optional IP68)
Medium temperature	- 25℃ ~ 80℃	- 25℃ ~ 120℃
The environment temperature	-25℃ ~ 60℃	
Ambient temperature influence	<±0.1%/10℃ or<±0.25%/10℃	
Repetition	≤±0.01% or≤±0.25%	
Analog output error	≤±0.02mA	
Measured range velocity	It can be set in 1-24, and the default is ≤12m/s	
Buried depth	—	≤5m（ONLY IP68）
Electrical connections	M20 * 1.5 Sealing sleeve, G1/2, NPT1/2	
Sensor cable	<30M	It needs to be customized for extra length

Function

Communications	Serial
Output	Current (4-20 mA), Pulse, Frequency, State switch
Function	ATC recognition, electrode contamination

Display user interface

Graphic display	Monochrome LCD, white backlight; Size: 128*64 pixels
	OLED，green，128*64 pixels
Display function	measurement value pictures can automatic circulation (measurements, condition, etc.)
Language	English, Chinese
Unit	You can configure the menu to select the unit, see "6.3 Configuration details" and "flow units 1-1" and "4-0 Accumulation Unit" section.
Operating unit	Mechanical key

Measurement accuracy

Accuracy grade	Pipe segment type: 0.5%
Repeatability	Pipe segment type: 0.15%
Maximum measured flow rate	It can be set in 1-24, and the absolute value of the maximum measured flow rate is 12m / s by default.

Operating environment

Temperature	
Environment	-10℃ - 55℃
Storage	-40℃ - 65℃
Conductivity	
Conductivity	> 30μS/cm

Material

Sensor housing	Carbon steel
Converter	Standard die cast aluminum

Electrical connections

Power supply	100-240VAC，50/60Hz
Power consumption	Max 15VA
Signal cable	Apply only to split type
Shielded cable	Signal section，wire：0.5mm^2 Cu /AWG20

Output

Current output		
function	Measurement of volume and quality (in the case of constant density)	
Setting	scope	4-20mA
	Max	20mA
	Min	4mA
Internal voltage	24VDC	
loading	≤750Ω	
Pulse and frequency output		
function	Set up Pulse and frequency output	
Pulse output	basis	Output pulse width: 0.25ms ~100ms Duty cycle: 50% (Pulse frequency ≥5H_z) F_{max}≤ 5000 cp/s
	setting	0.001L – 1m^3
frequency	Max	F_{max} ≤ 5000H_z
	setting	0-5000H_z
active	Active frequency/pulse output voltageU_{inner} ≤ 24VDC	
	Active frequency/pulse output current I≤ 4.52mA	
passive	Outer ≤ 36VDC	
Relay output		
function	Output as alarm	

8.2 Flow Meter

	$Q_{100\%}$ Unit m^3/h			
V[m/s]	0.3	1	3	7
DN[mm]	Min flow	Common flow		Max flow
15	0.19	0.64	1.91	4.45
20	0.34	1.13	3.39	7.91
25	0.53	1.77	5.30	12.39
32	0.87	2.90	8.69	20.27
40	1.36	4.52	13.57	31.67
50	2.12	7.07	21.21	49.48
65	3.58	11.95	35.84	83.62
80	5.43	18.10	54.29	126.67
100	8.48	28.27	84.82	197.92
125	13.25	44.18	132.54	309.25
150	19.09	63.62	190.85	445.32
200	33.93	113.10	339.30	791.70
250	53.01	176.71	530.13	1236.97
300	76.34	254.47	763.41	1781.29
350	103.91	346.36	1039.08	2424.52
400	135.72	452.39	1357.17	3166.73
500	212.06	706.86	2120.58	4948.02
600	305.37	1017.90	3053.70	7125.30
700	415.62	1385.40	4156.20	9697.80
800	542.88	1809.60	5428.80	12667.20
900	687.06	2290.20	6870.60	16031.40
1000	848.22	2827.40	8482.20	19791.80